ASSEMBLY INSTRUCTION

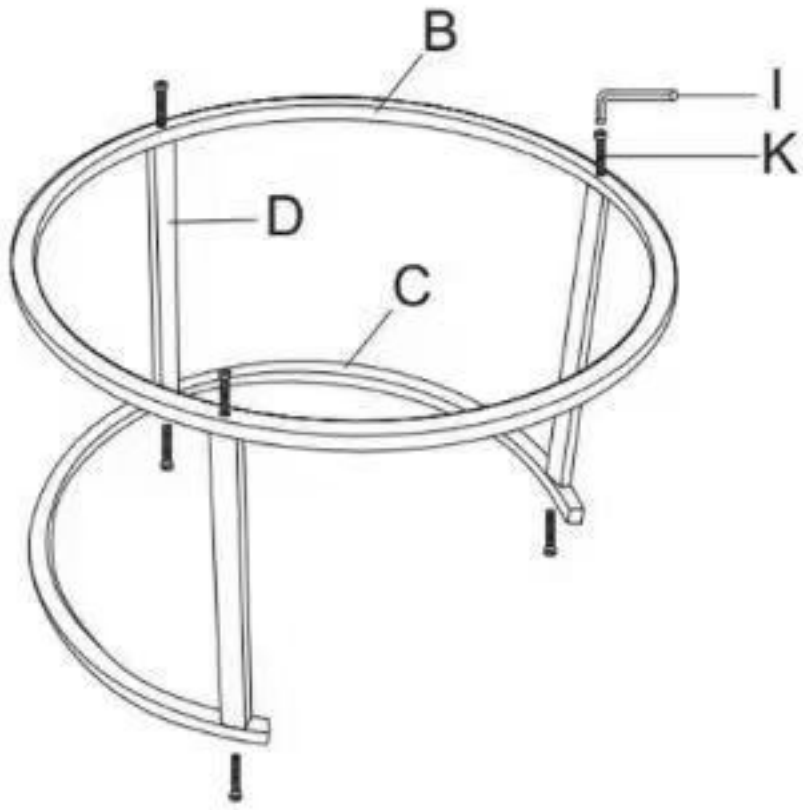

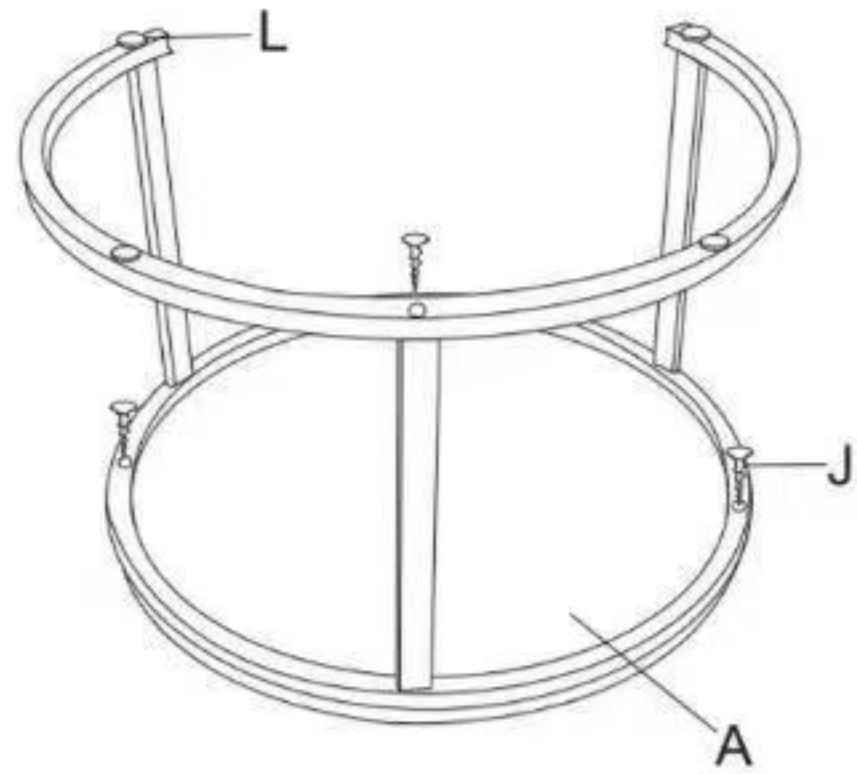

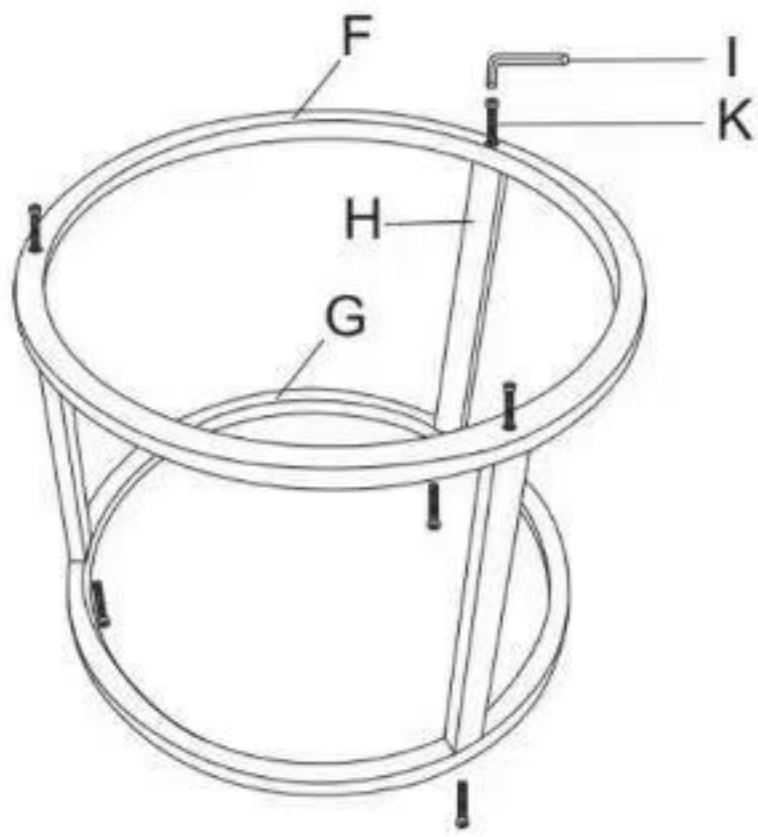

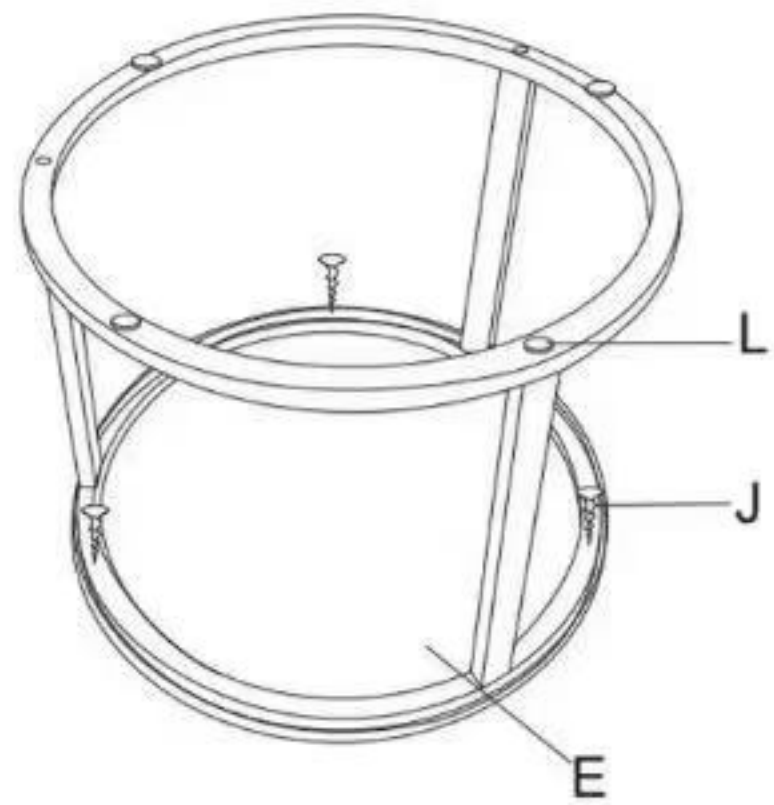

A 1	B 1	C 1	D 3
E 1	F 1	G 1	H 3
I 12	J 6	K 1	L 8